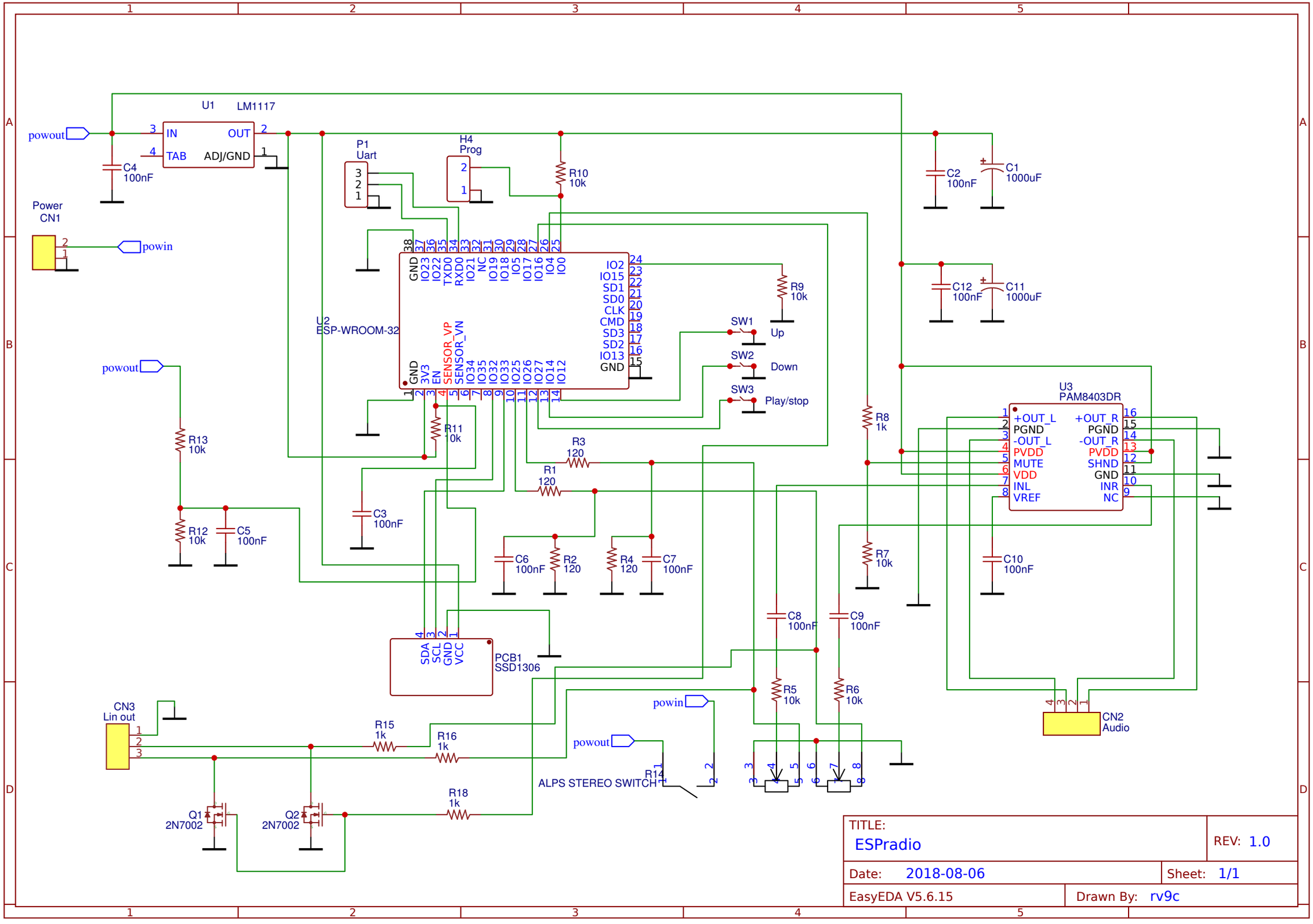

TITLE: ESPradio	REV: 1.0
Date: 2018-08-06	Sheet: 1/1
EasyEDA V5.6.15	Drawn By: rv9c